Drawing

	Batch #	Appliance part#
Hendi B.V. Steenoven 21 3911 TX Rhenen The Netherlands	660534 and up	229002
	Description	
	Food dehydrator 6 trays	

Date	12-02-2018	**Revision #**	Revision version
Revision	First bill of materials (BOM)		

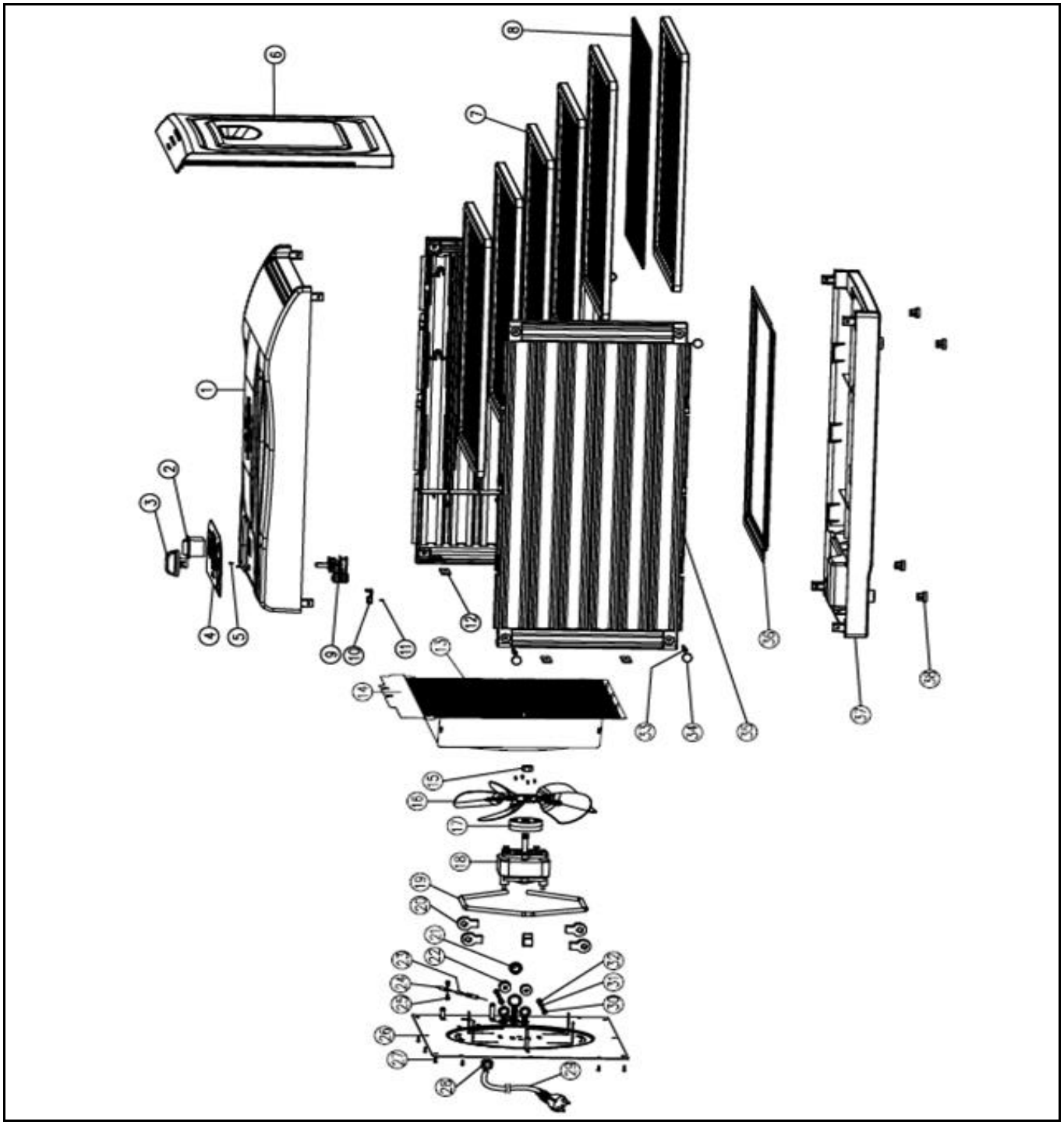

Bill of materials (BOM)

Hendi B.V.
Steenoven 21
3911 TX Rhenen
The Netherlands

Batch #	Appliance part#
660534 and up	229002
Description	
Food dehydrator 6 trays	

Date	12-02-2018	**Revision #**	Revision version
Revision	First bill of materials (BOM)		

Item	Description	Part#	Quantity	Remark	Picture
1	Top cover	n/a	1		
2	Switch	n/a	1		
3	Knob	n/a	1		
4	Display sticker	n/a	1		
5	Screw M4x6mm	n/a	1		
6	Door	941447	1		
7	Tray	941454	6		
8	Grid	941461	6		
9	Thermostat	941478	1		
10	Clamb	n/a	1		
11	Screw	n/a	1		
12	Square Nut	n/a	4		
13	Grid cover	n/a	1		
14	Housing	n/a	1		
15	Nut M6	n/a	1		
16	Fan	n/a	1		
17	Washer	n/a	1		
18	Fan motor 30W	941485	1		
19	Heating Element 450W	941492	1		
20	Ceramic holder	n/a	4		
21	Washer	n/a	1		
22	Ceramic washer	n/a	2		
23	Themal fuse 112°C	n/a	1	*obtain locally	
24	Connector	n/a	2		
25	Screw M4x8	n/a	2		
26	Back cover	n/a	1		
27	Screw ST4x10	n/a	9		
28	Cord inlet with retainer Heyco	931066	1		
29	Power Cord	941508	1		
30	Screw M4x25	n/a	2		
31	Washer M4	n/a	2		
32	Nut M4	n/a	2		
33	Screw ST4x10	n/a	8		
34	Screw Cover	n/a	8		
35	Tray support	n/a	2		
36	Drip tray	943731	1		
37	Bottom cover	n/a	1		
38	Rubber Feet	n/a	4		

n/a -> **not available** **nss** -> **not sold separately**

Circuit diagram

	Batch #	Appliance part#
Hendi B.V. Steenoven 21 3911 TX Rhenen The Netherlands	660534 and up	229002
	Description	
	Food dehydrator 6 trays	
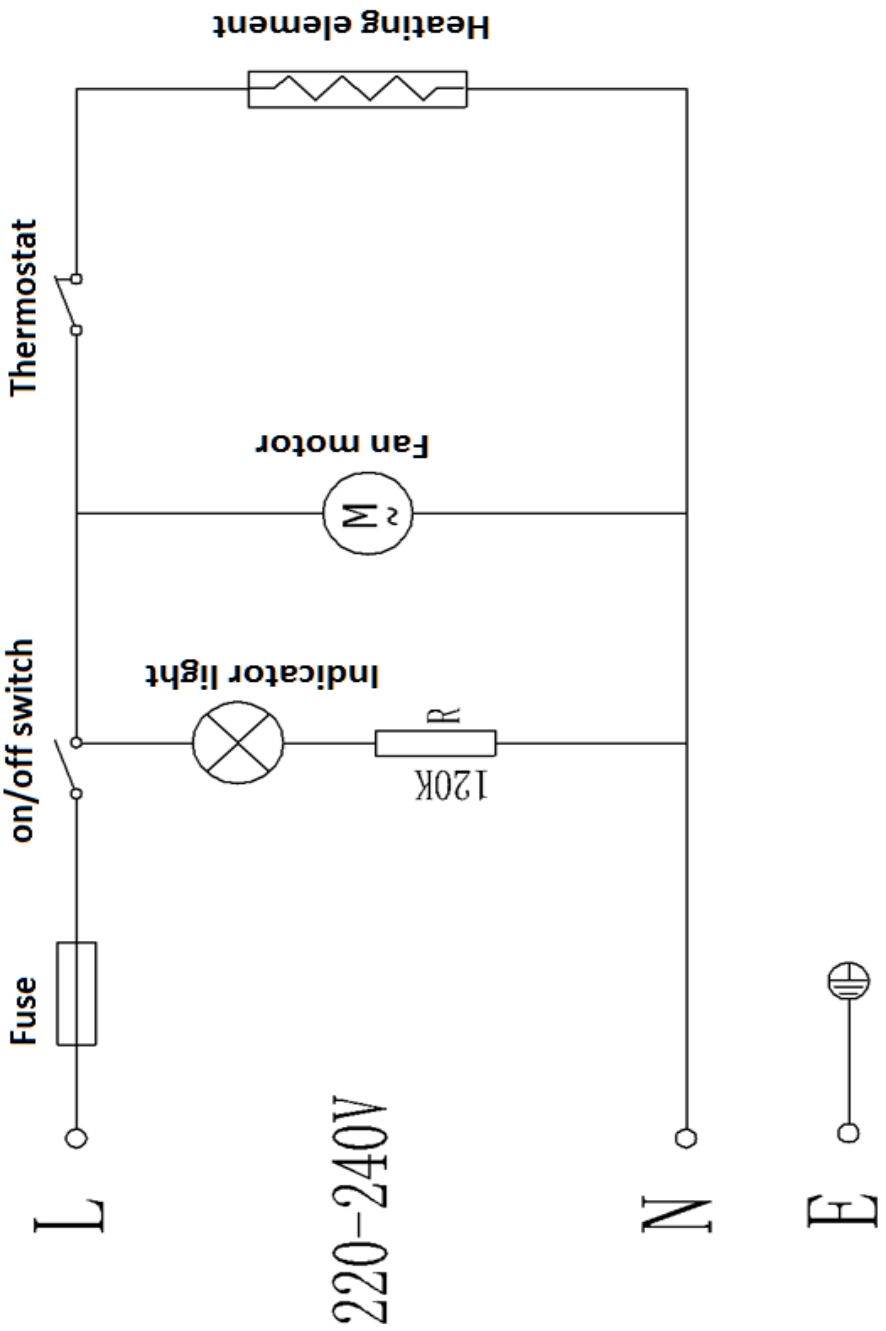
Date	12-02-2018	**Revision #**	Revision version
Revision	First bill of materials (BOM)