# Drawing

| | Batch # | Appliance part# |
|---|---|---|
| **Hendi B.V.**<br>Steenoven 21<br>3911 TX Rhenen<br>The Netherlands | 402617 and up | 148105 |
| | **Description** | |
| | Gas barbecue "Xenon-Pro" | |

| | | | |
|---|---|---|---|
| **Date** | 08-06-2015 | **Revision #** | Revision version 1.1 |
| **Revision** | New control knob | | |

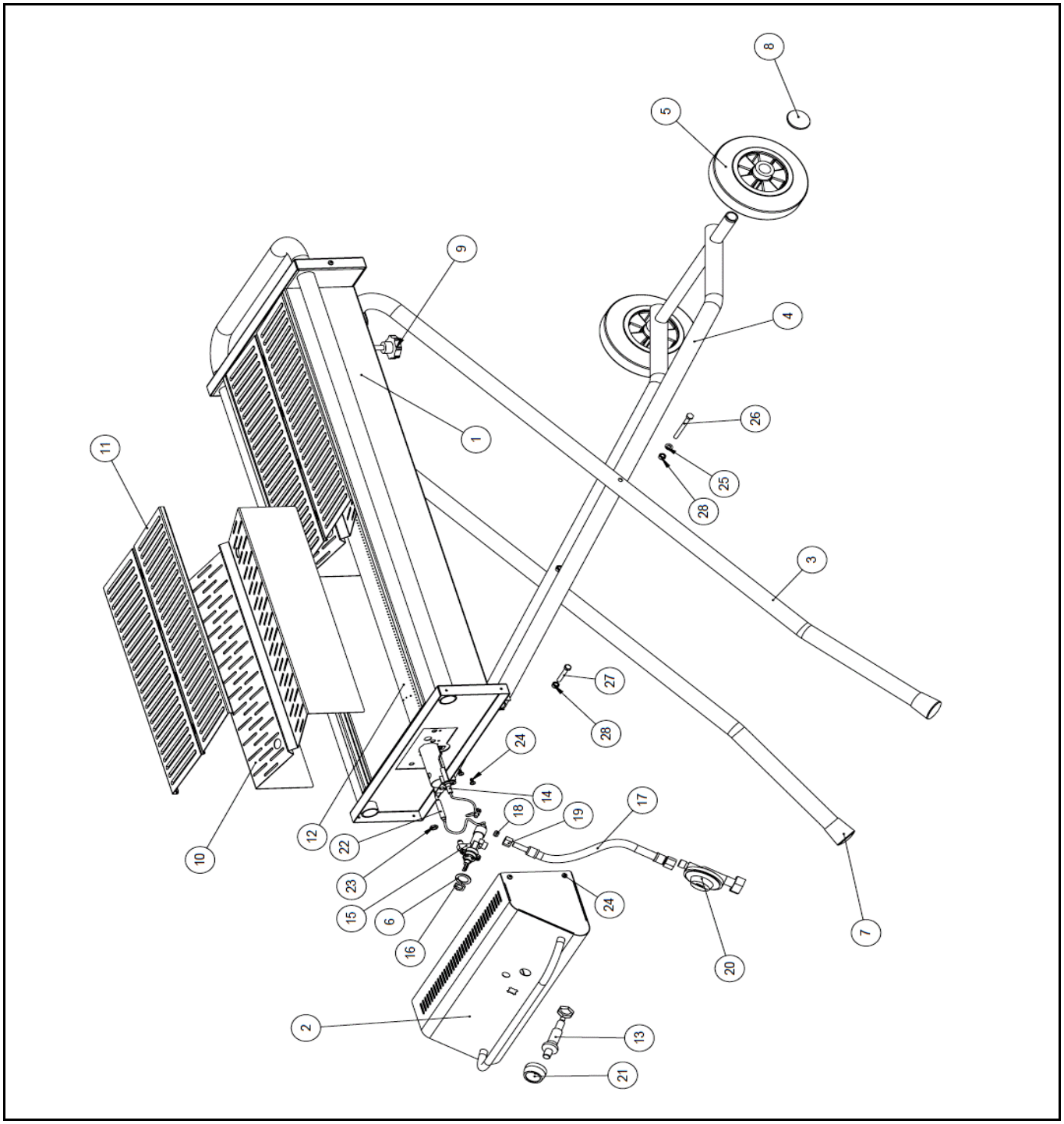

# Bill of materials (BOM)

**Hendi B.V.**
Steenoven 21
3911 TX Rhenen
The Netherlands

| Batch # | Appliance part# |
|---|---|
| 402617 and up | 148105 |
| **Description** | |
| Gas barbecue "Xenon-Pro" | |

| | | | |
|---|---|---|---|
| **Date** | 08-06-2015 | **Revision #** | Revision version 1.1 |
| **Revision** | New control knob | | |

| Item | Description | Part# | Quantity | Remark | Picture |
|---|---|---|---|---|---|
| 1 | Frame | n/a | 1 | | |
| 2 | Display cover | n/a | 1 | | |
| 3 | Tube frame | n/a | 1 | | |
| 4 | Tube frame | n/a | 1 | | |
| 5 | Wheel 100x30 | 148747 | 2 | | |
| 6 | Washer | n/a | 1 | | |
| 7 | Plastic cap 28mm | 148730 | 2 | | |
| 8 | Cover/holder | 150955 | 2 | | |
| 9 | Bolt M8x20 | 145128 | 1 | | |
| 10 | Flame diffuser | 148167 | 2 | | |
| 11 | Griddle | 148716 | 2 | | |
| 12 | Gas burner (xenon-pro) | 148150 | 1 | | |
| 13 | Piezo igniter | 153178 | 1 | | |
| 14 | Electrode with wiring | 145654 | 1 | | |
| 15 | Gas valve | 152164 | 1 | Incl item 16 | |
| 16 | Nut M12x1 | nss | 1 | Available as 152164 | |
| 17 | Hose assembly | 152171 | 1 | | |
| 18 | Cutting ring 4mm | nss | 1 | Available as 152089 | |
| 19 | Nut M12x1 | 152089 | 1 | Incl item 18 | |
| 20a | Regulator 50mBar | 152157 | 1 | | |
| 20b | Regulator 37mBar | 152188 | 1 | | |
| 20c | Regulator 37mBar UK | 153161 | 1 | *Note Only for United Kingdom | |
| 21 | Knob | 934654 | 1 | | |
| 22 | Thermo couple | 152195 | 1 | Incl 2 pcs of item 23 | |
| 23 | Zeskantmoer M8x1 | nss | 2 | Available as 152195 | |
| 24 | Sheet metal screw | n/a | 8 | | |
| 25 | Washer M6 | n/a | 2 | | |
| 26 | Bolt M6 x 65 | n/a | 2 | | |
| 27 | Bolt M6 x 40 | n/a | 2 | | |
| 28 | Locknut M6 | n/a | 4 | | |
| | | | | | |
| | | | | | |

**n/a** **-> not available** **nss** **-> not sold separately**